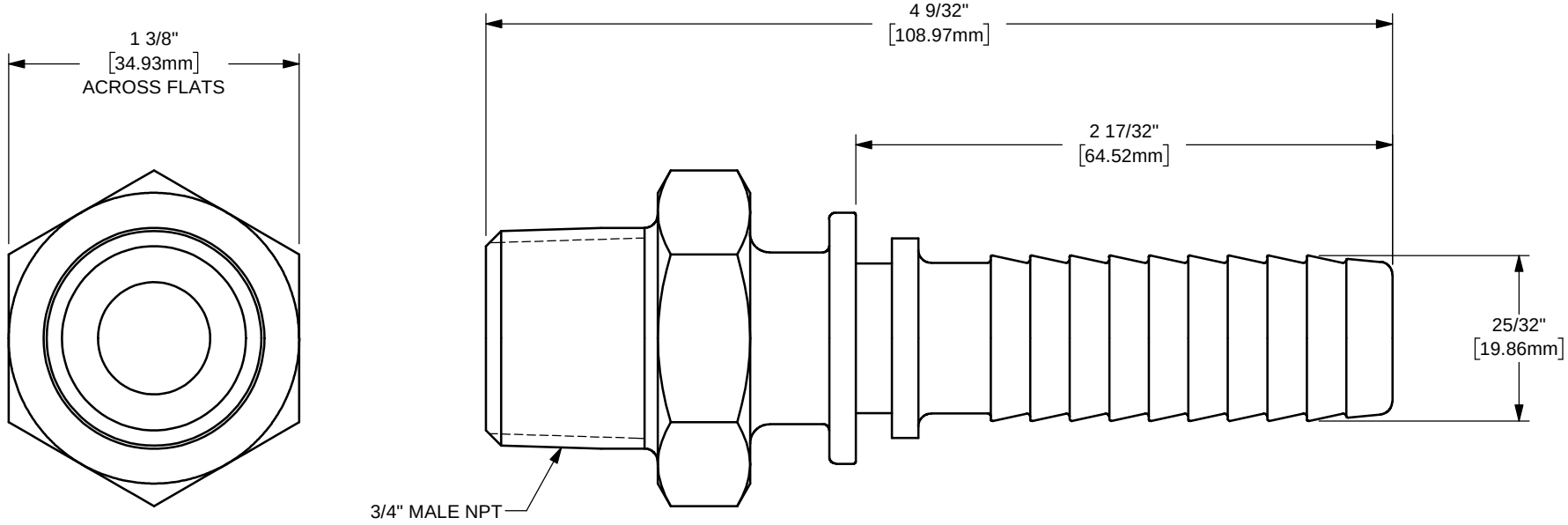

The Right Connection™

dixonvalve.com

PROPRIETARY AND CONFIDENTIAL

This drawing is owned by Dixon Valve & Coupling Co. and shall be returned upon demand. It is loaned on condition that it shall not be copied or reproduced or submitted to others without the owners consent. In accepting it subject to this condition the recipient further agrees that this drawing or any design detail or concept disclosed herein shall not be used in any way detrimental to or in competition with the owner. If the recipent does not agree to the terms of this agreement they shall return this drawing immediately. The information contained in this drawing is subject to change without notice.

DO NOT SCALE THIS DRAWING

DIXON U.S.A.

THE RIGHT CONNECTION ™

TITLE: 3/4" CRIMP STEAM STEM WITH MALE NPT END

MATERIAL: PLATED CARBON STEEL

PART NUMBER: **CSTMS-075**